BLACK+ DECKER™

3/8” (10mm) Variable Speed Hammer Drill

www.blackanddecker.com

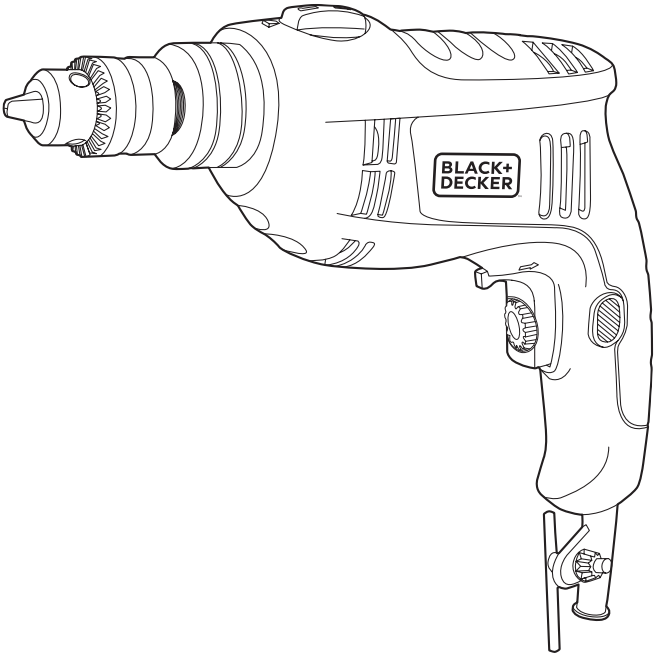

TB555

FIG. A

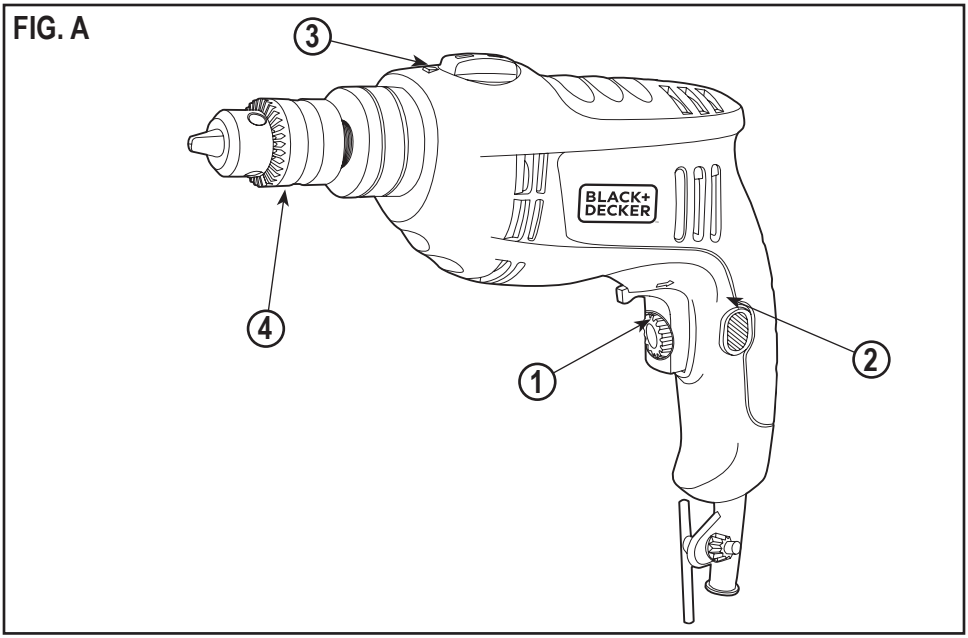

FIG. B

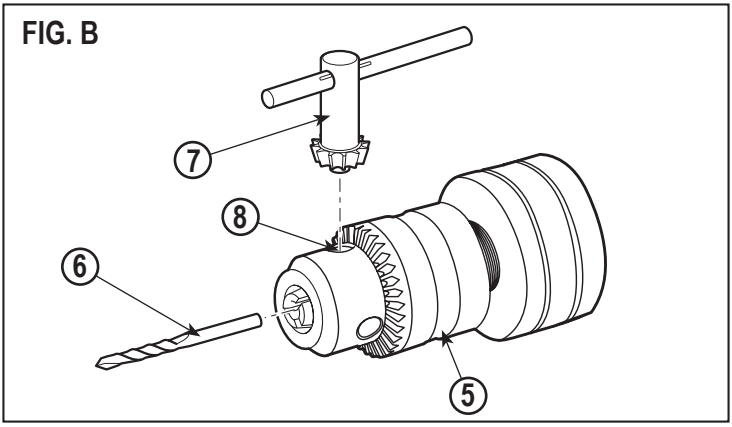

FIG. C

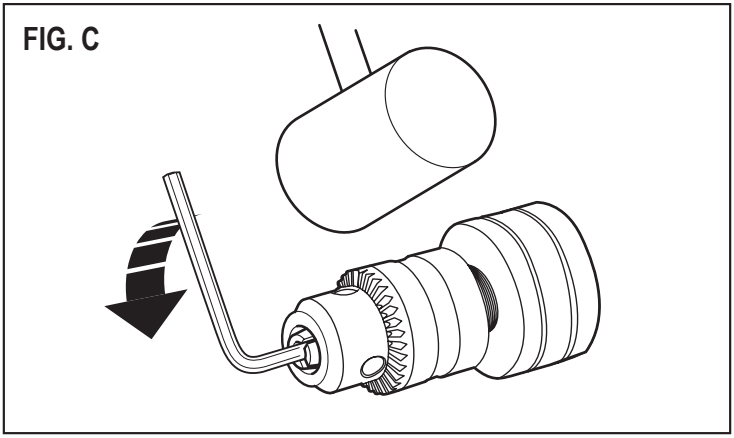

TECHNICAL DATA

		TB555
Power input	w	550
No-load speed	/min(rpm)	0-2900
Blows per minute	gpm(bpm)	0-46400
Max. drilling capacity:		
Steel	mm	10
Concrete	mm	10
Wood	mm	25
Weight	kg	1.6

DO NOT RETURN THIS PRODUCT TO THE STORE,
first contact your local BLACK+DECKER office
or nearest authorized service center.

INTENDED USE

Your Black & Decker hammer drill has been designed for drilling in wood, metal, plastics and masonry as well as for screwdriving purposes.
This tool is intended for consumer use only.

SAVE THESE INSTRUCTIONS

Warning! Read all safety warnings and all instructions. Failure to follow the warnings and instructions listed below may result in electric shock, fire and/or serious injury.

Save all warnings and instructions for future reference. The term “power tool” in all of the warnings listed below refers to your mains operated (corded) power tool or battery operated (cordless) power tool.

1. Work Area Safety

a. **Keep work area clean and well lit.** Cluttered and dark areas invite accidents.

b. **Do not operate power tools in explosive atmospheres, such as in the presence of flammable liquids, gases or dust.** Power tools create sparks which may ignite the dust or fumes.

c. **Keep children and bystanders away while operating a power tool.** Distractions can cause you to lose control.

2. Electrical Safety

a. **Power tool plugs must match the outlet. Never modify the plug in any way. Do not use any adapter plugs with earthed (grounded) power tools.** Unmodified plugs and matching outlets will reduce risk of electric shock.

b. **Avoid body contact with earthed or grounded surfaces such as pipes, radiators, ranges and refrigerators.** There is an increased risk of electric shock if your body is earthed or grounded.

c. **Do not expose power tools to rain or wet conditions.** Water entering a power tool will increase the risk of electric shock.

d. **Do not abuse the cord. Never use the cord for carrying, pulling or unplugging the power tool. Keep cord away from heat, oil, sharp edges or moving parts.** Damaged or entangled cords increase the risk of electric shock.

e. **When operating a power tool outdoors, use an extension cord suitable for outdoor use.** Use of a cord suitable for outdoor use reduces the risk of electric shock.

f. **If operating a power tool in a damp location is unavoidable, use a residual current device (RCD) protected supply.** Use of an RCD reduces the risk of electric shock. **Note:** The term “Residual Curent Device (RCD)” can be replaced by “Ground Fault Circuit Interrupter (GFCI)” or by “Earth Leakage Circuit Breaker (ELCB)”.

3. Personal Safety

a. **Stay alert, watch what you are doing and use common sense when operating a power tool. Do not use a power tool while you are tired or under the influence of drugs, alcohol or medication.** A moment of inattention while operating power tools may result in serious personal injury.

b. **Use personal protective equipment. Always wear eye protection.** Protective equipment such as dust mask, non-skid safety shoes, hard hat, or hearing protection used for appropriate conditions will reduce personal injuries.

c. **Prevent unintentional starting. Ensure the switch is in the off-position before connecting to power source and/or battery pack, picking up or carrying the tool.** Carrying power tools with your finger on the switch or energising power tools that have the switch on invites accidents.

d. **Remove any adjusting key or wrench before turning the power tool on.** A wrench or a key left attached to a rotating part of the power tool may result in personal injury.

e. **Do not overreach. Keep proper footing and balance at all times.** This enables better control of the power tool in unexpected situations.

f. **Dress properly. Do not wear loose clothing or jewellery. Keep your hair, clothing and gloves away from moving parts.** Loose clothes, jewellery or long hair can be caught in moving parts.

g. **If devices are provided for the connection of dust extraction and collection facilities, ensure these are connected and properly used.** Use of these devices

can reduce dust related hazards.

4. Power Tool Use and Care

a. **Do not force the power tool. Use the correct power tool for your application.** The correct power tool will do the job better and safer at the rate for which it was designed.

b. **Do not use the power tool if the switch does not turn it on and off.** Any power tool that cannot be controlled with the switch is dangerous and must be repaired.

c. **Disconnect the plug from the power source and/or the battery pack from the power tool before making** any adjustments, changing accessories, or storing power tools. Such preventive safety measures reduce the risk of starting the power tool accidentally.

d. **Store idle power tools out of the reach of children and do not allow persons unfamiliar with the power tool or these instructions to operate the power tool.** Power tools are dangerous in the hands of untrained users.

e. **Maintain power tools. Check for misalignment or binding of moving parts, breakage of parts and any other condition that may affect the power tools operation. If damaged, have the power tool repaired before use.** Many accidents are caused by poorly maintained power tools.

f. **Keep cutting tools sharp and clean.** Properly maintained cutting tools with sharp cutting edges are less likely to bind and are easier to control.

g. **Use the power tool, accessories and tool bits etc. in accordance with these instructions, taking into account the working conditions and the work to be performed.** Use of the power tool for operations different from those intended could result in a hazardous situation.

5. Service

a. **Have your power tool serviced by a qualified repair person using only identical replacement parts.** This will ensure that the safety of the power tool is maintained.

6. Electrical safety

Your tool is double insulated; therefore no earth wire is required. Always check that the main voltage corresponds to the voltage on the rating plate.

Warning! If the power cord is damaged, it must be replaced by the manufacturer, authorized BLACK+DECKER Service Center or an equally qualified person in order to avoid damage or injury. If the power cord is replaced by an equally qualified person, but not authorized by BLACK+DECKER, the warranty will not be valid.

7. Labels on tool

The label on your tool may include the following symbols:

	Read Instructions Manual	Hz	Hertz	.....	Class II Construction
	Use Eye Protection	W	Watts	....	Earthing Terminal
	Use Ear Protection	min	minutes	....	Safety Alert Symbol
V	Volts	.....	Alternating Current	.../min..	Revolutions or Reciprocation per minute
A	Amperes	.....	Direct Current		
		n_0	No-Load Speed		

FEATURES (Fig. A)

1. On/off switch
2. Lock-on button
3. Drilling mode sele**ctor**
4. Chuck

ADDITIONAL SAFETY INSTRUCTIONS FOR HAMMER DRILL

- **Wear ear protectors with impact drills.** Exposure to noise can cause hearing loss.
- **Hold power tool by insulated gripping surfaces when performing an operation where the cutting tool may contact hidden wiring or its own cord.** Contact with a “live” wire will also make exposed metal parts of the power tool “live” and shock the operator.
- **Use auxiliary handle(s), if supplied with the tool.** Loss of control can cause personal injury.
- **Use clamps or another practical way to secure and support the workpiece to a stable platform.** Holding the work by hand or against your body leaves it unstable and may lead to loss of control.
- Before drilling into walls, floors or ceilings check for the location of wiring and pipes.
- Avoid touching the tip of a drill bit just after drilling, as it may be hot.

ASSEMBLY

⚠ **Warning!** Before assembly, make sure that the tool is switched off and unplugged.

Fitting a drill bit or screwdriver bit keyed chuck (Fig. B)

- Open the chuck by turning the sleeve **(5)** counterclockwise.
- Insert the bit shaft **(6)** into the chuck.
- Insert the chuck key **(7)** into each hole **(8)** in the side of the chuck and turn clockwise until tight.

Removing and refitting the chuck (Fig. C)

- ► Open the chuck as far as possible.
- ► Remove the chuck retaining screw, located in the chuck, by turning it clockwise using a screwdriver.
- ► Tighten an Allen key into the chuck and strike it with a hammer as shown.
- ► Remove the Allen key.
- ► Remove the chuck by turning it counterclockwise.
- ► To refit the chuck, screw it onto the spindle and secure it with the chuck retaining screw.

USE

⚠ **Warning!** Let the tool work at its own pace. Do not overload.

⚠ **Warning!** Before drilling into walls, floors or ceilings, check for the location of wiring and pipes.

Selecting the drilling mode

- ► For drilling in masonry, set the drilling mode selector **(4)** to the T position.
- ► For drilling in other materials and for screwdriving, set the drilling mode selector to the 2 position.

Switching on and off

- ► To switch the tool on, press switch **(1)**. For variable speed units, the tool's speed depends on how far you press the switch. As a general rule for variable speed units, use low speeds for large diameter drill bits and high speeds for smaller diameter drill bits.
- ► For continuous operation, press the lock-on button **(2)** and release the variable speed switch. This option is available only at full speed. This option does not work in reverse rotation.
- ► To switch the tool off, release the switch. To switch the tool off when in continuous operation, press the variable speed switch once more and release it.

Forward/Reverse lever switch lock

- ► The forward/reverse lever switch determines the rotation direction of the tool and off button.
- ► To select forward rotation, release the trigger switch and push the forward/reverse lever switch to the left side of the tool.
- ► To select reverse, push the forward/reverse lever switch to the right side of the tool.
- ► When changing the position of the lever switch be sure the trigger switch is released and the motor is stationary.

Variable speed trigger

- ► The variable speed trigger provides a safety feature to the user when driving screws.
- ► You can use this trigger to vary the speed.
- ► The trigger is sensitive to tighten, press harder to accelerate.

MAINTENANCE

Your tool has been designed operate over a long period of time with minimum of maintenance. Continuous satisfactory operation depends proper tool care and regular cleaning.

⚠ **¡Warning!** Before performing any maintenance, switch off and unplug the tool.

- ► Regularly clean the ventilation slots in your tool using a soft brush or dry cloth.
- ► Regularly clean the motor housing using a damp cloth. Do not use any abrasive or solvent-based cleaner.

PROTECTING THE ENVIRONMENT

Separate collection. This product must not be disposed of with normal household waste.

Should you find one day that your Black & Decker product needs replacement, or if it is of no further use to you, do not dispose of it with household waste. Make this product available for separate collection.

Separate collection of used products and packaging allows materials to be recycled and used again.
Re-use of recycled materials helps prevent environmental pollution and reduces the demand for raw materials.

Local regulations may provide for separate collection of electrical products from the household, at municipal waste sites or by the retailer when you purchase a new product.

Black & Decker provides a facility for the collection and recycling of Black & Decker products once they have reached the end of their working life. To take advantage of this service please return your product to any authorised repair agent who will collect them on our behalf.

You can check the location of your nearest authorised repair agent by contacting your local Black & Decker office at the address indicated in this manual. Alternatively, a list of authorised Black & Decker repair agents and full details of our after-sales service and contacts are available on the Internet at: **www.2helpU.com**